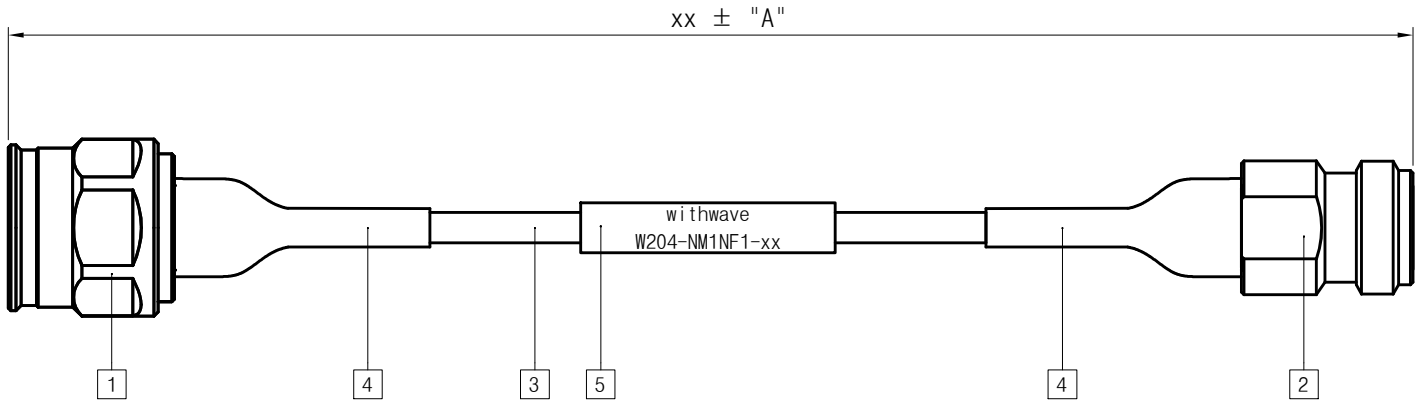

<Specification>

1. Material
   1) Connector : N Male(STS303, Passivated)
   2) Connector : N Female(STS303, Passivated)
   3) Cable : W204 Cable
   4) Adhesive Shrink Tube(Black)
   5) Marking tube(white)

2. Electrical
   1) Impedance : 50Ω
   2) Frequency range : DC to 18GHz
   3) VSWR : 1.3 : 1(DC to 18GHz)
      Assembly to be 100% tested for Return loss and Insertion loss.
   4) Withstanding Voltage : 500Vrms max.
      Assembly to be 100% tested for Opens, Shorts & Hipot tested(AC or DC).
      The Hipot voltage for the assembly should be set to the end option with the lowest test voltage rating.

3. Mechanical
   1) Durability : 500 Cycles

4. Environmental
   1) Temp. Range : -40℃ to +85℃
   2) RoHS Compliant

5. Cable Assembly to have protective cap assemblied on each end and to be individually packaged in bag with test report.

Model (Part No.)	XX (Length)	"A" (Tolerance)
W204-NM1NF1-6 inch	6 inch (152.4mm)	+0.157 inch / -0 (+4.0mm / -0.0)
W204-NM1NF1-12 inch	12 inch (304.8mm)	+0.196 inch / -0 (+5.0mm / -0.0)
W204-NM1NF1-24 inch	24 inch (609.6mm)	+0.393 inch / -0 (+10.0mm / -0.0)

THE INFORMATION HEREON/HEREIN IS PROPRIETORY TO WITH-WAVE CO., LTD. IT SHALL NOT BE COUPIED, DISCLOSED OR USED(PARTIALLY OR WHOLLY) IN ANY MANNER WITHOUT PRIOR EXPRESSED WRITTEN AUTHORIZATION OF WITH-WAVE CO., ITD.

Scale	N/A	Date	2025. 12. 01
Unit	inch	Drawn	MS. Kim

Title	W204 Cable Cable Assembly N(M)-N(F) Connector
Part No.	W204-NM1NF1-xx

withwave

Rev. –