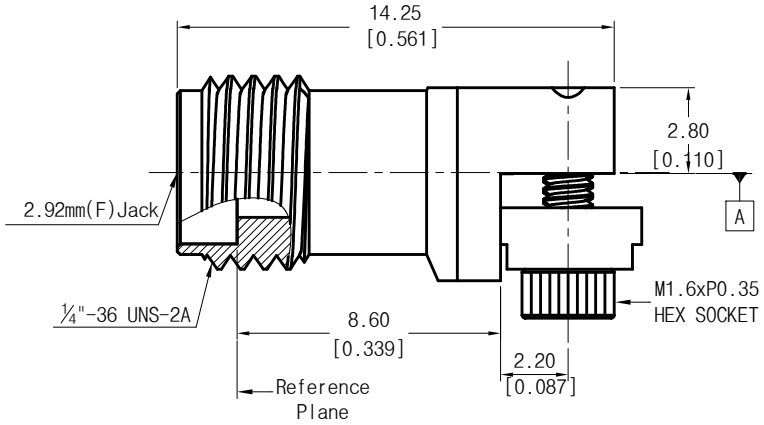

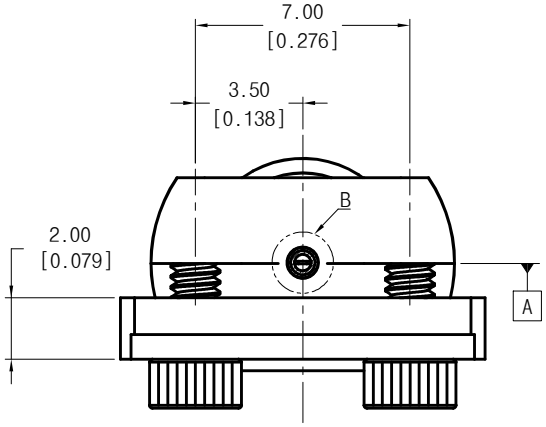

<Specification>

1. Material
   1) Body : Stainless Steel (Passivated)
   2) Center Conductor : BeCu (Au Plated)
   3) Insulator : PEI, PTFE
   4) HEX Socket Wrench Bolt : Stainless Steel (Passivated)
2. Electrical
   1) Impedance : 50Ω
   2) Frequency range : DC to 40GHz
   3) VSWR(dB) : 1.5 : 1(-13.97dB)
3. Mechanical
   1) Durability : 500 Cycles
4. Environmental
   1) Temp. Range : -40℃ to +125℃
   2) RoHS Compliant

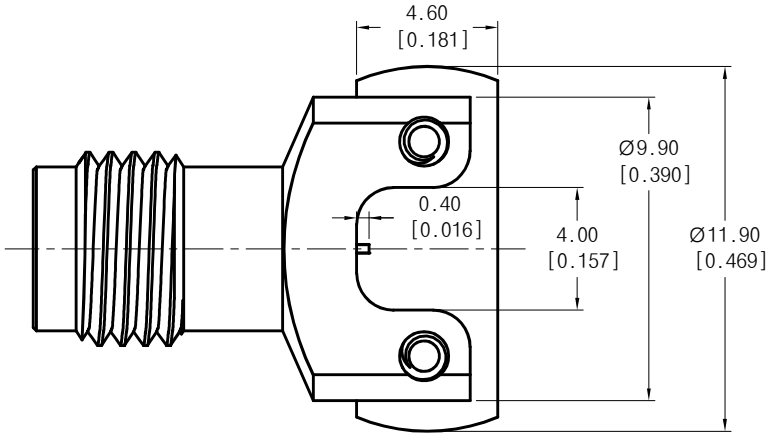

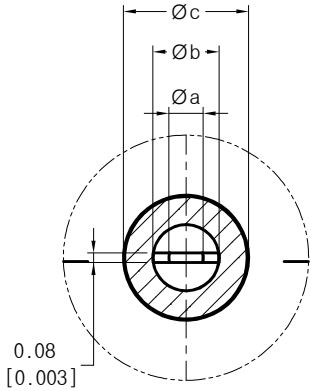

<Detail B>

Recomended
PCB Pattern

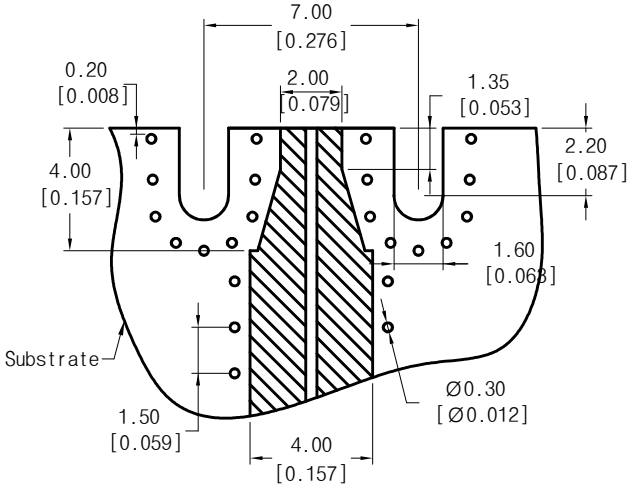

2.92mm(40GHz)

PCB			Pin Diameter		Dielectric Dia.	Part No.
Type	Substrate Thick.	Pattern Width	Øa	Øb	Øc	
	mil	mm				
RO4003C	8.0	0.436	0.28	0.42	0.82	SM03FS001
	12.0	0.677	0.40	0.64	1.14	SM03FS002
RO4350B	10.0	0.545	0.28	0.54	1.00	SM03FS003
Du5880	5.0	0.366	0.28	0.34	0.70	SM03FS004
	10.0	0.765	0.40	0.72	1.24	SM03FS005

THE INFORMATION HEREON/HEREIN IS PROPRIETORY TO WITH-WAVE CO., LTD. IT SHALL NOT BE COUPIED, DISCLOSED OR USED(PARTIALLY OR WHOLLY) IN ANY MANNER WITHOUT PRIOR EXPRESSED WRITTEN AUTHORIZATION OF WITH-WAVE CO., ITD.

Tolerance	Dimension	Range	Angle
	0	±0.1	±2.0°
	0.X	±0.05	±1.0°
	0.XX	±0.03	
Scale		Unit	mm

Date	2015. 10. 14
Approved	..
Checked	.
Drawn	Teri K
Title	2.92mm Female WaveLaunch EdgeMount Connector
Part No.	SM03FS001 ~ 005
	withwave
Rev.	