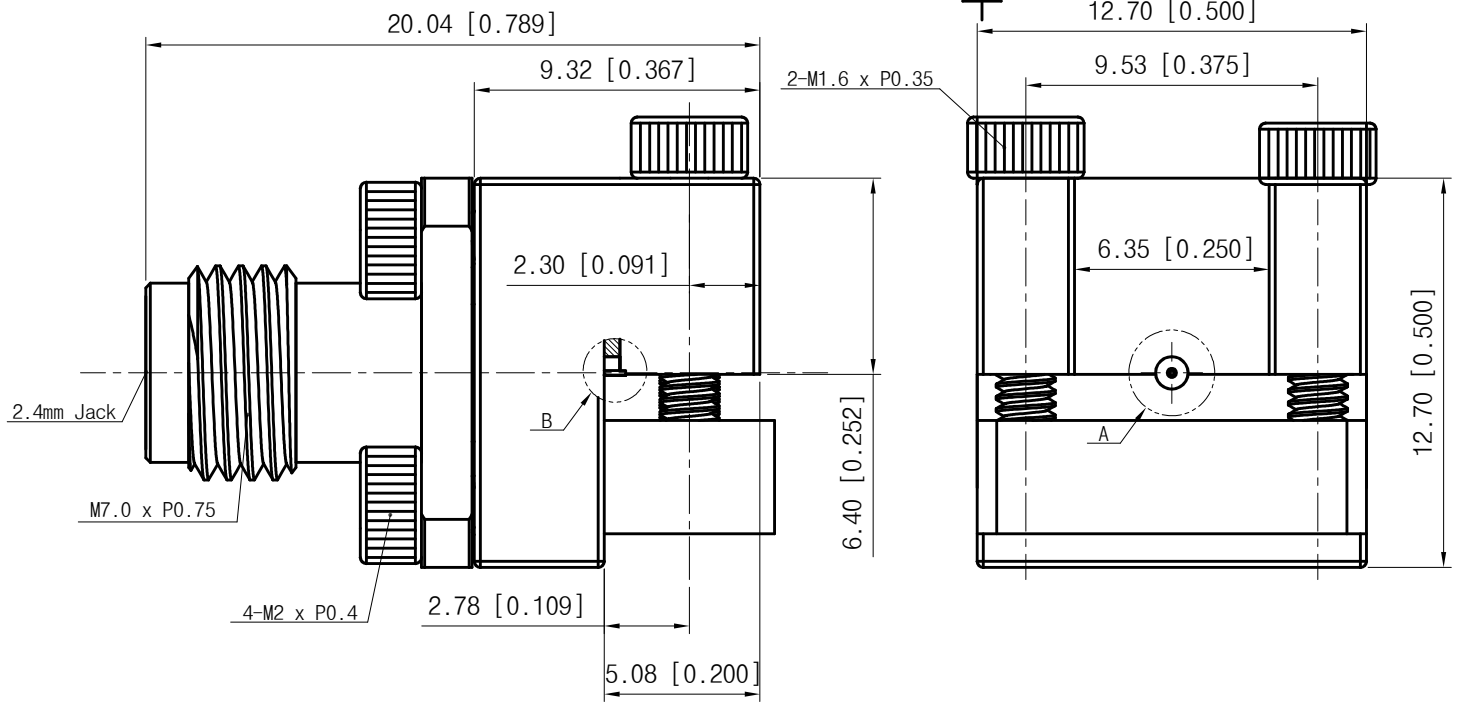

<Specification>

1. Material
   1) Body : Stainless Steel (Passivated)
   2) Center Conductor : Brass (Au Plated)
   3) Insulator : PEI
2. Electrical
   1) Impedance : 50Ω
   2) Frequency : DC ~ 50GHz
   3) VSWR : 1.4:1 (-15.5dB)
3. Mechanical
   1) Durability : 500 Cycles
4. Environmental
   1) Temp. Range : -40℃ to +125℃
   2) RoHS Compliacnt

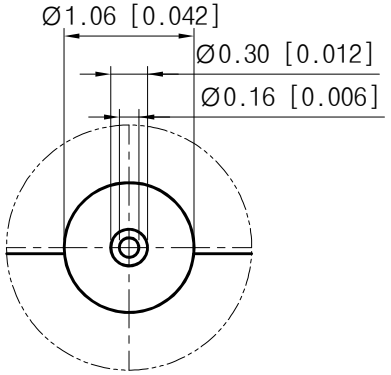

<Detail A>

PCB Pattern

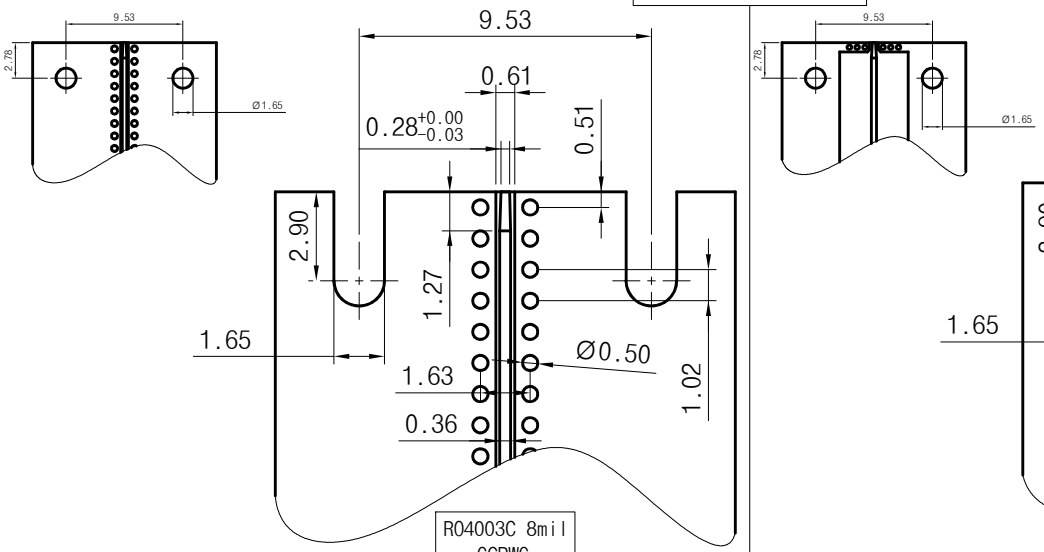

R04003C 8mil
GCPWG

R04003C 8mil
Top Ground Microstrip

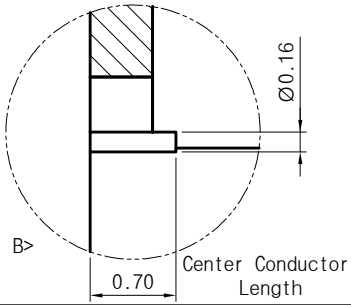

<Detail B>

Center Conductor Length

Title	2.4mm(F) End Launch Connector Standard Profile Type
Part No.	EL02FS001

THE INFORMATION HEREON/HEREIN IS PROPRIETORY TO WITH-WAVE CO., LTD. IT SHALL NOT BE COUPIED, DISCLOSED OR USED(PARTIALLY OR WHOLLY) IN ANY MANNER WITHOUT PRIOR EXPRESSED WRITTEN AUTHORIZATION OF WITH-WAVE CO., ITD.

Scale	N/A	Date	2018. 01. 05
Unit	mm	Drawn	Teri K

withwave

Rev. –